NATIONAL SECURITY AND AEROSPACE NEWSMAGAZINE

FORCE day3

INSIDE

Open and Shut

Prime Minister Modi inaugurates the shortest edition DefExpo ever

A FORCE REPORT

REFERRING TO THE UNIQUENESS of DefExpo 2022, Modi told his audience that not only was this the first ever 'Def-Expo' that showcased only Indian companies and technologies, it was the largest edition ever. Yet, both spatially and visually, DefExpo 2022 was much smaller than the previous editions. Most halls had single aisles with displays on either sides. The small size necessitated greater numbers of halls, hence, one to 12, in which two--3 and 6--were food halls.

Size, however, was smaller of the problems. The bigger problem was the organisation itself--thoughtless and hurried. The Modi government had decided that he owed the people of Gujarat, due for state elections in December, a DefExpo, so they must get one before the year was over. Hence, abracadabra: DefExpo 2022!

Since adequate location could not be found between Ahmedabad-Gandhinagar, two convention centres close to the Gujarat assembly were chosen--while one hosted the conferences, another the exhibition halls. So what if they were separated by a long park with the walking distance of nearly 2km. Google map lists it as 2.2km, while MoD officials who covered this in their vehicles insisted it was 1.5km. Whatever it was, in the sharp, dry heat of Gandhinagar, any walking distance was a metre too long in the afternoon. Consequently, those who went to one venue to attend a conference remained stuck there for good, and those who were trawling the halls chose to miss the conferences completely.

Cognizant of this dilemma, the ministry of defence itself issued an advisory to journalists, asking them to choose one location for the purpose of covering

FORCE
NATIONAL SECURITY AND AEROSPACE NEWSMAGAZINE

www.forceindia.net

EDITOR	Ghazala Wahab
ROVING EDITOR	Pravin Sawhney
SPECIAL PHOTOGRAPHER	Amin War
CORRESPONDENT	Smruti Deshpande
IT MANAGER & COORDINATOR	Saroja Kumar Sahoo
MANAGER SUBSCRIPTIONS & MARKETING	Sweety Singh Dhariwal
ASST. MANAGER PRODUCTION	Uday Haldhar
DESIGN CONSULTANT	Black Innovation
PUBLISHER AND PRINTER	Pravin Sawhney

FORCE IS DISTRIBUTED BY CNA AT ALL MAJOR BOOKSTORES IN:
BANGALORE | HYDERABAD | MUMBAI | DELHI | PUNE
CHENNAI | CHANDIGARH | JALANDAR | LUDHIANA | COCHIN

In addition to:
Abdullah News Agency, Lal Chowk, Srinagar 190 001
T 0194-2472621 M +91.9419074859

Janta Agencies, Shrichand Chinar Complex, Maulana Azad Road, Srinagar, Kashmir-190001
T 0194-2474755 M +91.9419066192
Contact Ghulam Mohiudeen

Modern Book Depot, SadarBazar, Agra Cantt, Uttar Pradesh
T 0562-2225695

EDITORIAL OFFICE
E-19, Sector 3, Noida 201 301, Uttar Pradesh, India
T +91.120.4278691 / 92 / 93
F +91.120.4278692
E writeback@forceindia.net

Printed at Assmat Media Pvt. Ltd.,
C-87, Ground Floor, Sector 10,
Noida, U.P, 201301

RNI No. Deleng/2003/12712
ISSN 0972-9453 Force

Prime Minister's inaugural event, as 'it would not be feasible to cover both'--his speech and visit to the halls.

The biggest indictment of the show, however, was the departure of key exhibitors from the venue right after the inauguration. They saw no value in staying beyond the inauguration. 'What is the point of staying on. We all know what the objective of the show is. And it is not trade,' he remarked candidly.

No florid speeches could have summed up the show better. ||

IAI Announces a New Subsidiary Located in New Delhi

Israel Aerospace Industries (IAI) opens a new subsidiary located in New Delhi—Aerospace Services India (ASI). IAI's investment in Aerospace Services India is a strong demonstration of IAI's support for the Indian government's Atmanirbhar Bharat vision. This also shows the commitment to the strong partnership between IAI and DRDO in developing and supporting advanced systems for the Indian armed forces.

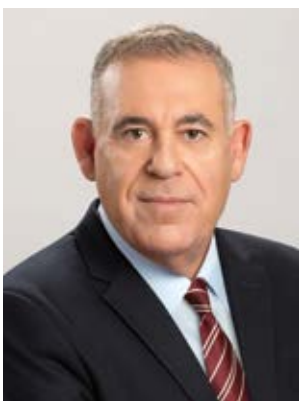

IAI's President and CEO, Boaz Levy said, "Aerospace Services India is leveraging top technology, innovation, and talent to deliver customer satisfaction so that they can focus on their mission. IAI has a well-established operation in India, working with various partners and customers in the Indian market. Through the years, IAI has pursued a flexible and adaptive business policy to comply and respond to PM Modi's self-reliance vision."

ASI is establishing state-of-the-art facilities to provide product life cycle support services for the air-defence systems in India. The new facilities will provide advanced and timely support to the Indian defence forces, including the Indian air force, navy and army.

The company is located in New Delhi, trades in Indian Rupees and is the sole authorised OEM's Technical Representative for the entire MRSAM system.

MRSAM is an advanced and innovative air and missile defence system which provides ultimate protection against a variety of aerial platforms. It is used by the Indian army, air force and navy. The system includes an advanced phased array radar, command and control, mobile launchers and interceptors with advanced RF seeker. MRSAM is jointly developed by IAI and DRDO for the Indian forces. ||

PM Modi Unveils HAL's HTT-40 at DefExpo-2022

Prime Minister Narendra Modi unveiled HTT-40, the indigenous trainer aircraft designed and developed by Hindustan Aeronautics Limited (HAL) at the India Pavilion during DefExpo-2022. Union Minister of Defence, Rajnath Singh and chief Minister of Gujarat, Bhupendrabhai Patel were present on the occasion. The aircraft has state-of-the-art contemporary systems and has been designed with pilot-friendly features.

The Basic Trainer Aircraft (HTT-40) indigenously designed and developed by HAL. HTT-40 would be used for basic flight training, aerobatics, instrument flying and close formation flights whereas its secondary roles would include navigation and night flying. HTT-40 is an example of cutting-edge technology designed to meet primary training requirements of the Indian defence services.

Built around a meticulously-tested, turbo-prop engine, it is equipped with the latest avionics, an air-conditioned cabin and ejection seats. HTT-40 boasts of unique features like running change-over of pilots, hot-refuelling and short- turnaround time.

The HTT-40 will be certified to international military aircraft training standards. All the tests required for certification were completed in record six years from the first flight.

The HTT-40 is an indigenous triumph. With over 60 percent in-house parts and collaboration of private industry, the HTT-40 is a shining example of the vision of Aatmanirbhar Bharat.

The HTT-40 has completed all systems tests, all PSQR performances, hot weather, sea level and cross wind trials and user assisted technical trials. Its controls optimized and 10 Turn Spins demonstrated on clean aircraft. The aircraft demonstrated for rain water resistance. All systems certified to PSQR and FAR 23. Provisional clearance for Airworthiness of the aircraft is received from CEMILAC. II

BAE Systems Signs Agreement with PTC Industries to Produce 155mm Ultra-Lightweight Howitzer Titanium Castings

BAE Systems & PTC Industries have signed an agreement to manufacture titanium castings for the Indian 155mm M777 Ultra-Lightweight Howitzer (ULH) at PTC Industries' production facility in Lucknow, Uttar Pradesh, India.

The agreement aims to produce the complex lightweight titanium castings, developing the tightly controlled fabrication process and ensuring the same parts can be manufactured in any future production of the M777 howitzers for India. The first sub-systems will be produced by the end of 2022, and there is a plan to progress manufacture of all three of the major structures (Saddle, Cradle, and Lower Carriage) that form the basis of the gun. Indian suppliers which participate in the M777 programme can earn a role in the overall BAE Systems global supply chain through their performance.

"The production process at PTC Industries is being developed and qualified to deliver the long-term support for the 145 M777s we are delivering to India," said the general manager of BAE Systems Weapon Systems UK, Duncan Stevenson which manages the manufacture and assembly of the M777 light-weight howitzers. "This agreement will allow BAE Systems and PTC Industries to jointly provide major structures to support the spares and repair programme required to keep the guns available for the Indian Army. It also ensures that the overall "Make in India" content of the ULH is above 60 percent, which will allow the government of India to procure any future platforms under a Make in India acquisition requirement."

BAE Systems also has a 52-Calibre 155mm barrel for the ULH, which it is willing to manufacture in India, further expanding Indian artillery capability from this battle-proven system. This would make India the first customer to have a 155mm 52-calibre platform under 5,800 kgs in weight. II

BRAHMOS SUPERSONIC CRUISE MISSILE

World Leader in Cruise Missile Family

MULTIPLE PLATFORMS
MULTIPLE MISSIONS
MULTIPLE TARGETS

MCGS Barracuda at sea

Mind the Gap

While the export order for BrahMos could be a model, the government needs to plug a few policy loopholes

SMRUTI DESHPANDE

After a sustained effort of over two decades, *BrahMos* Aerospace finally tasted success. And with it, the Indian defence industry had something to cheer about. The Philippines signed an agreement worth USD 374.96 million with BrahMos Aerospace Private Ltd for the supply of shore-based anti-ship missile systems.

The contract was signed by the defence secretary of the Philippines, Delfin N. Lorenzana and Director General of BrahMos Aerospace Pvt. Ltd., Atul Dinkar Rane in a virtual ceremony on January 28. *The Hindu* reported that the contract included delivery of three missile batteries, training for operators and maintainers as well as Integrated Logistics Support (ILS) package. This export order is in consonance with desperate Indian efforts to ramp-up defence exports. While the challenges remain, first about the *BrahMos* supersonic missile.

A joint venture between India's Defence Research Development Organisation (DRDO) and Russia's NPO Mashinostroyenia, BrahMos Aerospace, was established in India through an Inter-Governmental Agreement in 1998. The JV company started participating in international defence and aerospace shows in 2001. Each year, it participates in at least one national exhibition and about three to four international ones across the globe.

Despite several countries showing interest in the missile, BrahMos had not been able to crack the international market until recently for a number of reasons. In an interview to FORCE, Rane points out that the present order did not come overnight. The Philippines was in contact with BrahMos for over five years. Interestingly, the BrahMos export to the Philippines may not earn the company any profit. As Rane says in the interview, competing against well-known international players, the main aim was to put the foot inside the doorway. According to him, one of the ways to leverage the Indian advantage would be to offer a package of Hindustan Aeronautics Ltd-made Light Combat Aircraft (LCA) fitted with BrahMos NG or air to air missile *Astra* to potential importers.

After the BrahMos deal fell in place, Hindustan Aeronautics Ltd (HAL) signed a contract with the government of Mauritius (GoM) also to export the advanced version of the Advanced Light Helicopter (ALH Mark-III) for the Mauritius police force. The East-African country already operates HAL-built ALH and Do-228 aircraft, given on lease in 2021 for two years. Mauritius bought the ALH through a line of credit extended to it by the government of India.

Such a Long Journey

While the BrahMos missile is the biggest Indian export order so far, HAL had been in the export business for a while. HAL is one of the few Indian defence companies, albeit in the public sector, which has relentlessly been seeking export opportunities. The aerospace major made its first overseas sale in 2009 to Ecuador worth USD 45.2 million after winning the competitive global tender for ALH *Dhruv* helicopters. The programme, un-

ALH Dhruv helicopter

fortunately, did not end well.

In 2015, Ecuador terminated the contract unilaterally after four of the seven helicopters crashed. The following year, Ecuador went a step ahead and put the remaining three on sale. Later, when HAL attempted exports again targeting a few South-east Asian countries, it laid emphasis on carrying out the maintenance of these aircraft on its own. Clearly, HAL had learnt the lesson from the Ecuador experience. Even in the recent case of Mauritius, HAL in a statement mentioned that it would 'ensure technical assistance and product support to the customer to ensure healthy serviceability of the helicopter.'

In its attempts to be seen on the world defence exporters' map, the ministry of defence (MoD) along with the domestic defence industry have been making efforts for indigenisation which could lead to exports. Attempting to build trust among potential buyers of the LCA *Tejas* and military helicopters, HAL in 2020 announced that it would set up logistics bases in Malaysia, Vietnam, Indonesia and Sri Lanka.

The government of India, in its Defence Acquisition Procedure (DAP) 2020, has laid emphasis on both make-in-India and defence exports. According to the DAP: 'R&D and innovation remain important cornerstones of India's defence production strategy. With the launch of "Start-Up India" programme, India has become the hotspot of start-up activity in the world, having the third-largest start-up ecosystem globally. These strengths need to be leveraged to catapult India to next level of frontier defence technologies, both for domestic use and to foster exports.' The DAP also seeks to create a favourable environment for global Original Equipment Manufacturers (OEM) to shift manufacturing facilities to India.

With the thrust on undertaking exports, in August 2020, the MoD announced preparation of country-wise profiles of defence products and platforms for targeted marketing of equipment. The MoD also announced that the government will stand 'side by side' with the domestic industry in this endeavour through diplomatic channels. The announcement came soon after the embargo on import of selected defence items. Defence minister Rajnath Singh reiterated India's objective of achieving the target of Rs 35,000 crore (5 billion USD) worth of exports by 2024-2025, thereby making India a 'net exporter instead of a net importer'.

According to media reports, the Modi government has been targeting the ASEAN and countries in the Indo-Pacific, which are defence import-dependent. This move is seen as rivalling Chinese exports. Interestingly, Swedish think tank, Stockholm International Peace Research Institute's (SIPRI) data from 2021 listed China as the world's fifth largest arms exporter between 2016-20, accounting for 5.2 per cent of the total global arms exports. The lion's share of China's exports, around 75 per cent, went to Asian nations. In March 2020, India figured on SIPRI's arms exporters' list for the first time. It stood at number 23rd.

The SIPRI identifies three Indian companies among the top 100 defence companies in its 2020 rankings--HAL, Ordnance Factory Board and Bharat Electronics Ltd. The report released in December 2021, says, 'Their aggregated arms sales of USD 6.5 billion were 1.7 per cent higher in 2020 than in 2019 and accounted for 1.2 percent of the top 100 total.'

The Indian government also listed 85 kinds of equipment and 47 sub-systems for export to the Indian Ocean and African countries to help increase the defence base to USD 25 billion by 2025. The top items in the list included, BrahMos supersonic cruise missile, the Advanced Towed Artillery Gun System (ATAGS), *Pinaka* multi-barrel rocket launchers, and Combat Management System. According to government's own data, the value of India's exports in 2014-15 was Rs 1,941 crore; it increased to Rs 2,059 crore in 2015-16. The value of exports in 2016-17 was recorded at Rs 1,522 crore while it went up to Rs 4,682 crore in 2017-18 and Rs 10,746 crore in 2018-19. The value of defence exports was Rs 9,116 crore in 2019-20 and Rs 8,434.84 crore in 2020-21.

Currently, India exports defence items to 84 countries. However, the items that have contributed to the growth of Indian defence exports are not full-fledged platforms. They are items like teargas launchers, night vision devices, fire control systems, weapon simulators and lightweight torpedoes among others. As per the government's reply in Parliament, the bigger items that India had managed to export until recently included personal protective items, Offshore Patrol Vessels (OPVs), Advanced Light Helicopter (ALH) and surveillance systems. India has had some success when it came to naval vessels. Indian shipyards have sold ships to countries such as Mauritius and Sri Lanka. Vietnam is the latest Indian customer to buy ships from India. It is procuring 12 fast attack craft under a USD 100 million credit line extended by the government of India. As per reports, a second line of credit worth USD 500 million is also being mulled over by the government.

Statistically, India's export efforts over decades have yielded some results. However, this is far from what the government expects to happen. There exist gaps within the Indian defence manufacturing system which needs to be corrected for Indian exports to at least have a clear runway before they take off. ||

Azadi Ka Amrit Mahotsav

भारत इलेक्ट्रॉनिक्स
BHARAT ELECTRONICS
QUALITY, TECHNOLOGY, INNOVATION

Thank you, Stakeholders. We owe it to you.

BEL is
ET 'Iconic Brand of the Year'

Bharat Electronics Limited (BEL), a Navratna Defence PSU which shaped the growth of Defence electronics in India, is once again in the limelight for its iconic brand value, as **"The Economic Times - Iconic Brand of India - 2022"**. This is a testimony to the unwavering trust that customers and other stakeholders have reposed in BEL.

Choice of Customers, Committed & Competitive

Visit us at:
Hall 2, DEFEXPO 2022
Oct 18-22, 2022
Gandhinagar, Gujarat

BHARAT ELECTRONICS LIMITED
Registered & Corporate Office, Outer Ring Road,
Nagavara, Bengaluru - 560 045. Tel: +91 80 25039300.
Fax: +91 80 25039291. Toll free: 1800 425 0433.
CIN: L32309KA1954GOI000787 www.bel-india.in

Empowering the Nation's Defence Forces

Show Business

Indian armed forces lights up the Sabarmati River Front with pre-Diwali fireworks

Navy personnel perform mock bomb explosion

Indian Air Force's aerobatic team Sarang

MBDA and MILTECH Sign R&D Contract for Stealth Materials

MBDA and MILTECH have signed an R&D contract in the field of novel infrared stealth materials for military applications, in collaboration with the University of Patras. This contract falls under the co-operation programme associated with the FDI HN (Defence and Intervention Frigates for the Hellenic Navy), and supports European efforts towards independence in the defence industrial base.

CEO of MBDA, Eric Béranger declared, "The contract that we've signed today with MILTECH is a perfect example of how we champion innovation and co-operation at MBDA. By moving forward in the research of deeply innovative and disruptive technologies we have also reinforced for the long term the historical partnership we have built with Greece."

MBDA has supported the Greek land, marine and air forces for over 25 years which has allowed the creation of many collaborations with Greek Defence companies, as well as the identification of particular competences in several advanced technologies.

This is the reason why MBDA started advanced negotiations with several companies (INTRACOM, AKMON, ELFON, TEMMA, DASYC, SSA, HAI and MEVACO) to set up industrial co-operation projects, including competency transfers, for the benefit of the Greek armed forces.

The purpose of these co-operation programmes, associated with contracts such as providing the FDI HN frigates with missile systems, is to directly embed selected Greek companies in MBDA's supply chain. By doing so they can benefit from the opportunities that future international contracts represent in the long term. II

BEL, Triton Electric Vehicle (TEV) Sign MOU

Bharat Electronics Ltd (BEL) signed an MoU with Triton Electric Vehicle (TEV), for manufacture of Hydrogen Fuel cells by BEL with technology transfer from TEV, to meet the requirements of Indian market and mutually agreed export markets.

The MoU aims at tapping the demand for clean energy solutions for various

applications including for E-Mobility by leveraging Government of India's thrust for adoption of clean energy fuels for applications in transport, energy storage among others. II

Safran Launches VIGY 4 Optronic System for Surface Ships

Drawing on feedback from users of its many products in remote theatres of operations, Safran Electronics & Defense is launching VIGY 4, a new optronic sight for surface ships, to meet the needs and expectations of naval customers. This sight is the latest addition to the company's family of naval optronic systems, which also includes the VIGY HD and PASEO XLR.

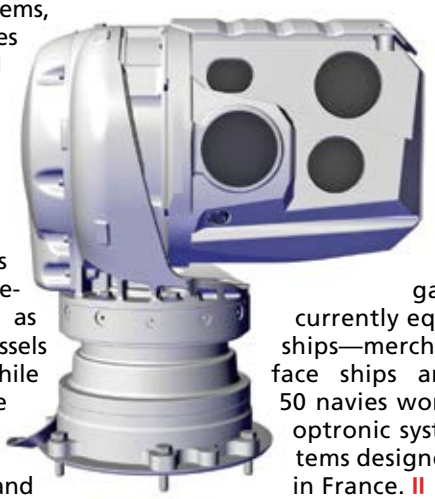

VIGY 4 features advanced observation and fire control capabilities to meet the requirements of medium-displacement ships such as offshore patrol vessels and corvettes, while VIGY HD is more suited to vessels such as coastal patrol boats and PASEO XLR to first-class vessels rang.

VIGY 4 is a compact gyrostabilized multisensor observation system with a SWIR (shortwave infrared) channel, which can see through mist and fog. The system can be coupled with a sector surveillance module to create a simple and effective surveillance system. It is also designed to control light and medium-calibre weapons.

Safran Electronics & Defense has expertise in optronics, electronic warfare and inertial navigation. The company currently equips more than 1,000 ships—merchant vessels, naval surface ships and submarines—and 50 navies worldwide with sensors, optronic systems and inertial systems designed and manufactured in France. II

L&T | MBDA

L&T MBDA Missile Systems Limited

Ingenious solutions
for India's defence

MICA Missile Air to Air Launcher

MICA Missile Rear Section

Missile Integration Facility at Coimbatore, India

L&T MBDA Missile Systems Limited, is a joint venture between Larsen & Toubro Limited and MBDA – two recognized international leaders in the defence industry. The Company offers India the most advanced guided weapon systems technology in the world.

With a vision to become India's largest private Missile and Missile Systems integrator, L&T MBDA Missile Systems Limited has started integrating critical missile sub systems at its Coimbatore Missile Integration Facility – a one-of-its-kind facility spanning over 16,000 sq. meters.

The facility houses critical technologies, clean temperature-controlled rooms, modern tools and testing equipment that meets European quality standards. With this LTMMSL has placed itself at the forefront for achieving its mission.

CBMCMBDAFM4D022022

L&T MBDA Missile Systems Limited
L&T Gate No.1, North Block -1 , 2nd Floor, Saki-Vihar Road, Powai Campus, Mumbai - 400 072, INDIA
Tel.: +91-22-67054986 Fax: +91-22-67054795 Email: enquiry@Lntmbda.com | www.Lntmbda.com

Registered Office:
Larsen & Toubro Limited, L&T House, N. M. Marg,
Ballard Estate, Mumbai - 400 001. INDIA
CIN: U29308MH2017PLC293402

BEL Presents its capabilities at Defexpo 2022

At the Defexpo, BEL is showcasing state-of-the-art products and systems spanning every domain of its business.

The products and systems on display during Defexpo 2022 have been clustered as 'Air Defence & Surveillance', 'C4I Systems', 'Artificial Intelligence-based Products', 'Non-Defence & Diversification Products', 'Radar Systems', 'Communication Systems', 'Airborne Products & Systems', 'Homeland Security and Cyber Security', 'Futuristic Technologies', 'Missile Systems', 'EO & Laser-based Products', 'Outdoor Display Products' and Indian pavilion. In addition, BEL is showcasing its R&D capabilities by launching/demonstrating some of its new products/technologies.

BEL's display in the area of 'Air Defence & Surveillance' includes Hexacopter, Tethered UAV, Robotic Surveillance and D4 Anti-drone Systems. The display in the area of 'C4I Systems includes C4I technologies, Combat Management Systems and Navigational Consoles. Also on show is complete range of products and systems for 'Non-Defence & Diversification'.

The company is showcasing its 'Radar Systems' including Battle Field Short Range Active Electronically Scanned Array (BFSR-AESA) Radar, Air Defence Fire Control Radar, Mountain Fire Control Radar, Weapon Locating Radar, etc.

BEL's display in the area of 'Communication Systems' includes High-Capacity Radio Relay, Manpack High Frequency Software Defined Radio (SDR), Point to Multi Point Radio, SDR Hand Held Naval version, and a whole lot of other products.

Other 'Futuristic Technologies' on display include Automatic Dependent Surveillance-Broadcast System, Position Indicator – G3I, Hand-Held Indian Regional Navigation Satellite System, Extended C-Band Block Up-Converter, Monolithic Microwave Integrated Circuit (15 types within one enclosure), etc. The highlight of BEL's outdoor display are Hexacopter, Tethered UAV, Swarm of UAVs, Robotic Surveillance Platform, HLS CIBMS, BFSR AESA, FMCW based DDR, Hydrogen Based scooter and Ultra Light Weight Enclosure with Platform. II

RAPIDFire: a State-of-the-Art System to Revive the French Naval and Anti-Aircraft Artillery Industry

Nexter's flagship product at Euronaval is the RAPIDFire turret, whose new design is presented on 1:1 scale. This concentrate of innovations will become a reference in the field of medium-calibre naval turrets.

Adapted to low-layer ground-to-air defence, and in particular to anti-drone warfare, the RAPIDFire protects ships, land units or bases against a wide range of threats: jet skis, boats, loitering ammunition, UAVs, light aircraft or missiles up to 4,000 meters away.

Expansion of the turret offer

Nexter presents the NARWHAL 20mm remote controlled turret reinforced by the MBDA AKERON missile launch pod. The integration of this innovative solution demonstrates the modularity of our systems.

In addition, thanks to its experience in land and naval turrets, Nexter now offers naval versions of its remotely operated land turrets, including the ARX 25, which is equipped with the VBCI's 25mm gun.

European leader in naval ammunition

Supplier to 60 armies worldwide with a catalogue of more than 250 references, Nexter Arrowtech is presenting its 20 to 127mm ammunition range for naval turrets at Euronaval. As Europe's leading naval munitions manufacturer, Nexter Arrowtech is demonstrating its ability to develop game changing ammunition for high-intensity conflicts.

For instance, a fuse for 40mm L70 ammunition with real-time inductive programming will be displayed on the stand. This new technology considerably increases the operational capabilities of existing weapons, particularly in the anti-aircraft and anti-drone fields. II

Bharat Forge Signs an MoU with General Atomics, USA for Lithium-Ion Battery System for Indian Navy

Bharat Forge Ltd., signed a Memorandum of Understanding (MOU) with General Atomics, US. Under the terms of the MOU, Bharat Forge and General Atomics' Electromagnetic Systems Group (GA-EMS) will collaborate for Lithium-Ion Battery System for naval platforms/submarines to address the requirements of Indian Navy. The parties have also agreed to partner with each other in the area of permanent magnet motors.

Speaking on the occasion, Chairman Kalyani Group, Baba Kalyani said, "We have been relentlessly working towards bringing niche technologies in the country with the aim of making India self-reliant in defence verticals. GA is a market leader for in-service Li-Ion Battery solutions for naval platforms/submarines and and our partnership with General Atomics is a firm step in the direction to develop Make in India solutions for Indian Navy and setting up a strong defence technology and manufacturing vertical within India."

"We look forward to working with Bharat Forge to meet the requirements of Indian Navy. Our Li-Ion battery system has been developed after 10 years of rigorous R&D. Instead of the usual 'fault prevention', our design philosophy is based on assuming a fault and requiring fault containment', which has made our system extremely safe and reliable," stated president of GA-EMS, Scott Forney. "We are committed to working with companies like Bharat Forge, whose reputation for excellence and dedication to quality is synergistic with ours, as we continue to deliver technology innovations and cutting-edge systems for undersea and surface platforms." II

Defence Minister Calls Defence Attachés the Bridge Between India, Friendly Countries

Defence Minister Rajnath Singh stated that defence attachés are the bridge between India and friendly foreign countries for mutual defence cooperation, urging them to promote Indian defence production capabilities under *Aatmanirbhar Bharat* and understand the technological innovations taking place in the Indian Defence Production sector, both public and private to showcase and promote these in their countries of accreditation. He was delivering inaugural address at the fourth two-day DAs Conference being held in New Delhi on October 13.

Appreciating the performance of the DA, Defence Minister said that defence attachés make a significant contribution in securing national interests in line with foreign policy; strengthening international cooperation and enhancing the capabilities & preparedness of the armed forces. He urged them to carry forward the government's vision of achieving self-reliance, describing it as the only way to make India strong and respected at the global stage, amid the constantly evolving global security scenario. He, however, maintained that *'Aatmanirbharta'* does not mean isolation from the rest of the world, but ensuring national security and strategic autonomy through a modern military.

Saying that India cannot and should not rely on imports, Rajnath Singh reaffirmed the government's commitment to achieve self-reliance in defence manufacturing to remain prepared to deal with future security challenges. He termed defence attachés as the forerunners of *'Aatmanirbharta'* in defence.

The defence minister listed out the steps taken by Ministry of Defence to attain self-reliance, including encouraging private sector participation; issuance of positive indigenisation lists; setting up of defence corridors in Uttar Pradesh & Tamil Nadu; rolling out of new production & export policies; promoting innovation and increasing FDI limit. He said, the defence attachés can bring investment in India by raising awareness about these decisions in different countries. Describing them as a bridge, he stressed that defence attachés can liaison with their respective countries and help in fulfilling the needs of both sides.

"India is manufacturing world class and cost-effective weapons, equipment & platforms, which are being internationally recognised. Our defence products are not only world class and reliable in quality but also relatively economical," said Rajnath Singh.

Two days' conference will have different briefing sessions wherein chief of services, foreign secretary, and other dignitaries from Ministry of Defence will address the DAs on various diplomatic, strategic and functional issues pertaining to defence cooperation.

After this conclave the DAs will also accompany the delegations from the friendly foreign countries attending the DefExpo-22 which is starting from October 17 at Gandhinagar in Gujarat. II

All Fired Up

India's artillery modernisation programme picks up pace with new acquisitions and inductions

ATAGS Firing

SMRUTI DESHPANDE

THE INDIAN ARMY'S ARTILLERY Modernisation programme, which was stalled for nearly two decades, has finally gained pace. This programme aims at inclusion of diverse and specialised artillery equipment for the army to be used in different terrains and specialised areas of operations. Among howitzers, the programme aims at inclusion of towed, mounted and ultra-light howitzers; tracked and wheeled self-propelled artillery; missiles, multi-barrel rocket launchers, UAVs and ammunition among others.

As it is known, artilleries had played a pivotal role in bringing victory to India in the Kargil war against Pakistan. However, even three decades after the war, no procurements were made in this area. The modernisation was stalled because of the setbacks in procurements. After the procurement of nearly 400 pieces of 155 mm/39 calibre FH-77B howitzers in mid-Eighties, manufactured by the Swedish arms manufacturer Bofors, India inducted the US-origin M777 A2 Ultra-Light Howitzers (ULH) and K9 Vajra Self-Propelled of the Indian-South Korean make in 2018.

Artillery modernisation is important for India because it promises the inclusion of different types of artillery based on the terrain. While howitzers can function well in mountainous regions, self-propelled guns are meant for the plains.

This programme of acquiring Field Artillery Rationalisation Plan (FARP) first introduced in 1999, under which the Regiment of Artillery decided to acquire 2,800-3,000 155 mm/52 calibre guns of all kinds and 155 mm/39 calibre lightweight howitzers by 2027. As per reports, the acquisitions would include 814 truck-mounted guns, 1580 towed guns, 100 tracked self-propelled guns, 180 wheeled self-propelled guns and 145 ultra-light howitzers. Two other guns include the 155 mm pool of towed artillery.

M777 Howitzers

Even as the Manmohan Singh-led central government had floated a number of Request for Proposals (RFPs) for procurement of different howitzers, there arose various technical issues with the vendors, and the deals had to be scrapped. In 2008, the government of India issued a number of global tenders, none of which culminated into the final stages of acquisition. The tender floated for M777 Howitzers was one such example. Although the deal started in 2008 and trials were on, the deal was sealed only in 2016.

The ministry of defence (MoD) had in 2008 floated a RFP towards the procurement of 145 pieces of ultra-light 155 mm/39-calibre towed gun-howitzers. The cost of the deal amounted to Rs 3,000 crore. BAE Systems and Singapore Technologies were the two companies shortlisted for this deal. However, in 2009, Singapore Technologies came to be blacklisted. As the BAE Systems was the only contender left, the Indian government initiated a government-to-government deal for 145 M777 howitzers.

This deal between India and the US was finally signed under NDA government in 2016 with a 'Make in India' component in a government-to-government deal. The deal is worth USD737 million and consists of a 30 per cent offset clause worth USD200 million. Of the total 145 M777 pieces, 120 will be made within the country and the remaining 25 will come in a flyaway condition from the Original Equipment Manufacturer (OEM), the BAE Systems. The US-based company has tied up with Mahindra Defence to complete the manufacturing of these guns. Reports have stated that by the end of 2021, the acquisition of M777

will be completed. It's not known how many M777s have been inducted into the army till now. However, by March 2020, the delivery of 25 pieces of these guns were completed and it was reported that by the end of 2020, 70 more would be delivered.

Amidst the border challenge with China, India has deployed these M777 Howitzers in Eastern Ladakh. This gun has a range of 30 km. This artillery can be easily airlifted and carried by the Chinook helicopters, which will give the army an edge in the mountains.

K9 Vajra-T

The K9 Vajra-T is a Self-Propelled Artillery jointly manufactured by Indian defence firm Larsen & Toubro (L&T) and South Korea's Hanwha Techwin. The army has so far inducted 51 pieces of this artillery. Hundred pieces K9 Vajra, a 155mm/52 calibre howitzer were ordered by the Indian Army in 2017 at a cost of USD583 million.

It is a tracked and self-propelled artillery originally developed by Samsung for the South Korean military. It was earlier known as 'K9 Thunder'. Hanwha Defense had supplied the first batch of 10 guns to the Indian Army in November 2019 and the rest of the 41 had been manufactured and provided three months ahead of the schedule. L&T, the India partner to complete the order, was given the responsibility of manufacturing 90 guns.

K9 Vajra weighs 50 tonnes. It can fire 47 kg bombs at 43-km distant targets. It has the 'shoot and scoot' capability. The acquisition of 1580 155mm/52 calibre guns is the largest artillery acquisition that will be stretched over a period of 12-15 years.

ATAGS

Advanced Towed Artillery Gun System (ATAGS), a 155 mm/ 52 calibre gun, is being jointly developed by the Defence Research and Development Organisation (DRDO) in partnership with Bharat and Tata power Strategic Engineering Division (SED). These guns are in their trial phase. The army will put them to test in Sikkim in January-February for the winter-use trials. They are yet to undergo 'mobility' and summer trials. These guns had suffered a setback in September 2020 when a barrel of one of the ATAGS pieces undergoing trials burst at Pokhran.

Up until now, there have been cases of barrel explosion in different artilleries. It happened with ATAGS, the Dhanush and also with M777 A2 procured from the US. However, it has been blamed on faulty ammunition.

ATAGS have been designed by Armament Research Development Establishment (ARDE) of the DRDO. While the guns have been made by both Bharat Forge and Tata Power SED, the barrel has been solely made by Bharat Forge. The range of these guns is 48 km. It fires five round bursts. These artilleries are said to consist of 95 per cent indigenous content.

ATAGS operate on an all-electric drive. The gun controls, ammunition handling, opening and closing the breech and ramming the round into the chamber are all done electrically, which makes it faster than its competitors. The deal to procure 150 of these guns was signed in 2018.

ATHOS

To meet a requirement of 1580 guns in this category, the MoD has shortlisted Elbit Systems after floating a tender to procure these. Elbit Systems' (Autonomous Towed Howitzer Ordnance System) ATHOS 2025 from Israel won against the French gunmaker Nexter's TRAJAN in the tender to supply the Indian Army with 1580 artillery guns due to its comparatively low pricing.

As per a report in the Business Standard, Elbit Systems has written to the MoD that they would offer 70 per cent weapon-building in India, which is significantly more than the required 50 per cent under India's 'Make in India' programme. The MoD requires Elbit Systems to supply first 400 pieces of ATHOS 155 mm/52-calibre towed artillery guns in 'fully built or knocked-down condition'. The Indian partner of Elbit Systems is Bharat Forge. The cost of the deal is estimated to be USD1.2 billion. These guns have a firing range of above 40 km.

Sharang

The Ordnance Factory Board (OFB) in February handed over the first 130 mm M-46 artillery gun upgraded to 155 mm to the Indian Army at the DefExpo that took place in February 2020. The gun is a vintage Soviet-origin towed artillery.

In 2013, the army had issued an RFP for the OFB as well as the private sector companies. In competitive bidding, the OFB won the bid. In 2018, the army awarded a contract to upgrade 300 of these guns to the OFB. Sharang is a 130 mm artillery gun which was 'up-gunned' to 155 mm/45 calibre. The up-gunning has brought an advanced range to this artillery with a boost in firepower. The gun now has a range of 36 km from earlier 27 km. The delivery for these guns will be completed by the end of 2022.

Dhanush

Like Sharang, Dhanush towed artillery gun will also be produced by the OFB. It is the first indigenously-built long-range artillery gun with a range of 38 km and has 155 mm/45 calibre. Six piece of the Dhanush artillery guns had been handed over to the army in April 2019.

The total pieces of this guns to be delivered by the OFB stand at 114. It has a strike range of 38 km. The automated technology allows three to six guns to be fired simultaneously at a single target, with each gun holding the capability to fire 42 hours per round. The features of this gun include inertial navigation-based sighting system, auto-laying facility, on-board ballistic computation and an advanced day and night direct firing system. Self-propulsion allows the gun to negotiate and deploy itself.

The OFB had gained the Transfer of Technology from Bofors to produce indigenously in the Eighties. However, it had not been utilised. The design of this artillery is based on that of the Bofors gun. The second batch of these guns was to be delivered by OFB early this year, however, that did not happen in view of the Covid-19 pandemic.

Mounted Gun Systems

Another project that will prove to be significant for the Indian Army is the inclusion of Mounted Gun Systems (MGS). This project made some noise, however, there are no major developments seen. Ashok Leyland Defence Systems had formed a consortium agreement with L&T and Nexter Systems for its CAESAR artillery system with 6x6 Super Stallion chassis from Ashok Leyland. The OFB also had fielded an MGS-based on a Dhanush gun mounted on 8x8 Tatra truck produced by BEML. The latter was first unveiled in Chennai's DefExpo and was reported to have undergone a firing test the same year in November. However, no latest developments have taken place.

Undoubtedly, this programme promises benefits to the Indian Army. The force, which was in dire need of capacity building, has finally received the much-needed push. Today, as India faces heightened tensions with its neighbours, it is mandatory for the country to keep its forces well-equipped. India has deployed its Artillery formations on its eastern as well as the western border. Experts believe, the newly procured and advanced artilleries will help them fight not just wars but also counter insurgencies prevalent on the western border with Pakistan and in the Northeast. II

Think Ahead

How Indian Army is focussing on indigenous capability to develop futuristic technologies

***EXAMINING PROGRESS** Former COAS General MM Naravane at the Army's Quantum Laboratory in MHOW*

ATUL CHANDRA

THE INDIAN ARMY IS INCREASING induction of cutting-edge technologies for various purposes as part of its modernisation plans. This has been necessitated by the sea change taking place in warfare due to the emergence of new domains and disruptive technologies, compelling the Indian Army to reorganize and re-structure to fight future wars.

The army top brass is now seized of the need to induct emerging and disruptive technologies, if the manpower intensive service is to transform itself to meet future security challenges. The army is already investing heavily into Artificial Intelligence (AI), Autonomous Weapon Systems, Quantum Technologies, Robotics, Cloud Computing and Algorithm Warfare in order to achieve convergence between its war fighting philosophies and military attributes of these technologies.

The army is now participating in a wide array of technology initiatives in coordination with start-ups, MSMEs, Private Sector, Academia, Defence Research and Development Organisation (DRDO) and Defence Public Sector Undertakings (DPSUs). In December 2020, the army along with support from the Society of Indian Defence Manufacturers (SIDM), conducted an outreach webinar for start-ups in emerging technologies. 89 start-ups pitched their proposals focused on the field of Drones, Counter Drones, Robotics, Autonomous Systems, AI, Quantum computing, Block chain technology, 3D printing, Nanotechnology and Medical applications. The webinars organised by the Army Design Bureau (ADB) resulted in 13 proposals being short listed for assessment of their viability and applicability for military use.

Looking Ahead

To study the whole gamut of issues on the implications of AI on national security and defence needs, a multi-stakeholder Task Force on Strategic Implementation of AI for National Security and Defence was constituted in February 2018. The task force has representation from government, defence services, academia, industry professionals, Defence Research and Development Organisation (DRDO), defence public sector undertakings (DPSUs), National Cyber Security Coordinator (NCSC), Indian Space Research Organization (ISRO), Bhabha Atomic Research Centre (BARC) and start-ups.

In January 2019, the ministry of defence (MoD) announced that the Task Force had outlined the way forward for adoption of AI in defence sector including future roadmap on how to integrate and embed AI strategy with core defence strategy. The MoD also stated that the DPSUs and ordnance factories have been assigned a roadmap for developing AI enabled products. AI based tools would aid the Indian armed forces in areas such as decision support, sensor data analysis, predictive maintenance, situational awareness, accurate data extraction, security etc.

The Indian Army is making steady and significant strides in the field of emerging technology domains. The army, with support from the National Security Council Secretariat (NSCS) has recently established the Quantum Lab at Military College of Telecommunication Engineering, Mhow (MP) MCTE to spearhead research and training in this key developing field. Gen MM Naravane, the Chief of Army Staff was briefed on the facility during his recent visit to Mhow.

In December 2021, the army announced the establishment of a Quantum Laboratory at Mhow, alongside an existing Artificial Intelligence (AI) Centre at the same institution. According to the Ministry of Defence (MoD), 'training on cyber warfare is being imparted through a state of art cyber range, and cyber security labs.' Research undertaken by Indian Army in the field of Quantum Technology will help it leapfrog into next generation communication and transform the current system of cryptography in the armed forces to Post Quantum Cryptography (PQC). Key thrust areas are Quantum Key Distribution, Quantum Communication, Quantum Computing and Post Quantum Cryptography. Ideation for the army's involvement in Electromagnetic Spectrum Operations took place at a seminar on Electromagnetic Spectrum and National Security organised in October 2020, following which the army's technology institutions received an impetus to invest in AI, Quantum and Cyber.

Future Tech at DRDO

Centre for Artificial Intelligence and Robotics (CAIR) is one of the key DRDO laboratories and has excelled in design and development of cutting-edge technologies in the domains of Artificial Intelligence, Robotics, Command and Control, Networking, Information and Communication Security leading to development of mission critical products for secure Command and Control (C2).

CAIR has developed several C2 systems, Command Control and Communication (C3) Systems and Tactical Command Control Communication and Intelligence (Tac C3I) Systems for various users in the armed forces. Some of these systems include the Artillery Command Control

***LEFT AND RIGHT** The Army places emphasis on indigenous advanced defence technologies; future battlefield will witness greater use of unmanned and robotic systems*

and Communication System (ACCCS), Battlefield Management System (BMS) and Command Information and Decision Support System (CIDSS). To support these systems with terrain information, CAIR has developed the Indigenous Geographic Information System (INDIGIS).

CAIR received project sanction for INDIGIS in 2007, which was later installed in Indian Army and Indian Navy formations for several years during which user feedback was obtained on its operational utility. According to the DRDO, some of the unique functions developed for INDIGIS between 2012 - 2015 were found very useful by the army and navy during field exercises. The first Transfer of Technology (ToT) agreement of INDIGIS technology was taken in 2018 by Bharat Electronic Limited (BEL), Bangalore on a non-exclusive basis.

According to DRDO, BEL has gone on to successfully integrate this technology in 17 existing Indian military systems and exported this technology to the Armenian military as part of Weapons Locating Radar (WLR) system. The INDIGIS technology is also an important part of a geospatial visualisation software being developed by CAIR for 'Project Dharastra' of the Defence Geoinformatics Research Establishment (DGRE), Chandigarh. Dharastra is a flagship on-going project of DGRE for study and analysis of geographic data pertaining to strategic locations in the Tibetan regions.

CAIR also initiated a project in January 2019 to develop AI-based solutions for Signal Intelligence to help to enhance intelligence, collation and analysis capabilities for the armed forces. The budget for the programme was Rs73.9 crore. The AI-based tools used in the development of the project will help the defence forces constructively in areas such as decision support, sensor data analysis, predictive maintenance, situational awareness, accurate data extraction, and security. Initial work has also been undertaken on a project named 'Energy Harvesting Based Infrared Sensor Network for Automated Human Intrusion Detection (EYESIRa)'. With a cost of Rs.1.8 crore, the EYESIRa project is partially based on the principles of IoT.

Robotic Endeavour

Numerous programmes are under-way to deliver robotic devices to the Indian armed forces and most successful and visible of these are robots for scout and Improvised Explosive Device (IED) detection. The army is also driving the growth of the defence robotics sector in the country by assisting in the development of indigenously built defence robots. The demonstration of drone swarms at the Army Day Parade in January last year was an indicator that the service is fast-tracking the induction of technologies related to offensive drone operations and AI.

Torus Robotics, a Tamil Nadu based start-up is working on UGVs, robotics and indigenous & disruptive power-train technologies. The company entered into an MOU with Bharat Earth Movers Limited (BEML) at Aero India 2021 for development of Artificial Intelligence (AI) based UGVs. Torus has already delivered a fully electric one tonne UGV fitted with a six Degrees of Freedom (DOF) robotic arm for detection, identification and disposal of explosive ordnance and Improvised Explosive Devices (IED). Another firm Combat Robotics, which is also from Tamil Nadu, has also been selected by the army for development of a smart spherical throwable robot. Development of a prototype that features AI-based vision with a thermal feed and two-way communication is now under-way.

DRDO has been working on robots for military purposes for nearly three decades now. Development of the Daksh remotely operated vehicle began in the early 2000s and deliveries to the army commenced in 2011. Daksh is used to remotely handle Improvised Explosive Devices (IED) and can operate continuously on a single charge for three hours. The ROV can be controlled either by fibre optic communication over 100m distance or can be controlled by wireless communication over 500m line of sight. Production of Daksh is undertaken by BEL.

DRDO has also developed the *Daksh Mini*, which is a battery operated tracked vehicle with a telescopic arm fitted with a manipulator arm offering multiple degrees of freedom. It is capable of extracting suspected objects with telescopic manipulator arm. The Daksh Scout is another variant and is fitted with several cameras mounted on the platform for real time viewing in front, to the rear or on either side. Also developed by DRDO is the Unexploded Ordnance Handling Robot (UXOR) which can handle, diffuse and detect Unexploded Ordnance (UXO) i.e., bombs and missiles up to 1,000 kg remotely from two km under Line of Sight (LOS) conditions. It is powered by an IC engine and has an endurance of six hours. The IAF is said to be in the process of acquiring these systems. BEL has also been working with the Central Research Laboratory (CRL) to design and develop robots since late 2018. ||

RR Reiterates Commitment to Partner India for Combat Engine Co-Development at DefExpo 2022

Rolls-Royce presented its advanced defence capabilities and future-ready technology solutions at the DefExpo 2022, while reiterating its commitment to support India's vision of self-reliance in defence, through collaboration opportunities to co-design, co-develop and co-produce fighter jet engines in the country.

The company familiarised customers and potential partners with its technologically superior offerings for naval defence, including full-electric propulsion solutions and the power-dense MT30 marine gas turbine for aircraft carriers, frigates and destroyers.

President, India & South Asia, Rolls-Royce, Kishore Jayaraman said, "As India takes steps to realise its vision of 'self-reliance' in defence, we believe we are well positioned to help leapfrog this journey through meaningful partnerships for co-creation of engine technologies. True self-reliance will come when such a partnership not only results in Intellectual Property (IP) ownership in India, but shared creation of capabilities in-country to indigenise defence technology in the future."

Director, Business Development & Future Programmes, Rolls-Royce, Alex Zino said, "The UK is a natural ally for India, and it is heartening that the two countries have pledged greater cooperation in defence. India can leverage the combined strength of its own scientific talent and resources along with the UK's technology experience to accelerate its combat engine development programme. We, at Rolls-Royce, are committed to support such a partnership. Our rich history of engine technology development for both civil and defence engines, particularly in the gas turbine-based aero-engine segment, makes us a partner of choice to collaborate and co-develop defence technology in India."

In a press statement, Rolls Royce stated that the company has a rich legacy of successful partnerships in India and had pioneered several initiatives that have contributed to the development of the aerospace and defence ecosystem in India as it is today. "Engine development in the country will lead to further strengthening and growth of this ecosystem, and also propel defence exports," the release further stated.

With more than 16,000 military engines in service with 160 customers in 103 countries, the company is a powerful player in the defence aerospace engine market. In India, the company has a robust ecosystem of Indian partners, engineering talent, supply chain, digital, service delivery and manufacturing capabilities.

For naval customers at DefExpo, Rolls-Royce showcased cutting-edge solutions including full electric propulsion (IFEP) as well as advanced offerings such as the mighty MT30—the world's most power-dense marine gas turbine in service today with destroyers, frigates and aircraft carriers. MT30 offers a superior power-to-weight ratio, generating up to 40MW from a 30-tonne packaged unit, and offers ship designers much more options and flexibility in designing the naval vessels of tomorrow.

For the past nine decades, Rolls-Royce has been serving the Indian armed forces with advanced technology products and solutions to power land, naval and air defence capabilities.

The company has expanded its footprint in India with a robust ecosystem comprising supply chain, manufacturing, research and development, digital, service delivery and high-skilled engineering capabilities. Rolls-Royce's Power Systems business also showcased its advanced solutions for naval and land defence at the expo. ||

INS Tarkash Becomes the First Indian Naval Ship to Visit Port Gentil, Gabon

INS Tarkash made a port call at Port Gentil, Gabon as part of her ongoing deployment in the Gulf of Guinea for anti-piracy patrol. This marks the first visit by any Indian Naval Ship to Gabon.

During her stay in the harbour, the ship and her crew will participate in official and professional interactions as well as sports fixtures.

Her professional interactions will include discussions and drills on fire fighting and damage control, medical and casualty evacuation issues, and diving operations. There will also be familiarisation visits. In addition, yoga sessions and social interactions are also planned. ||

Boeing India and MIDHANI to Explore Collaboration for Aerospace and Defence Raw Materials

Boeing India announced it will assess and collaborate with Mishra Dhatu Nigam Limited (MIDHANI) to develop raw materials for standard aerospace parts and components in India.

Indigenous availability of special aerospace materials and alloys has been identified as crucial for creating a self-reliant aerospace and defence industry in India. The availability of essential aerospace materials is the first step in securing the supply chain, and aligns with the government's vision of Aatmanirbhar Bharat.

"Public Sector Units are an important part of Boeing's supply chain footprint in India. The potential collaboration with MIDHANI will strengthen Boeing's supply base and increase material sourcing options from India," said president, Boeing India, Salil Gupte. "This would be a key step in building our India supply chain – from raw material sourcing to supplying a finished product. It will further our commitment for bolstering India's growing aerospace and defence ecosystem."

"We are excited about the prospect of partnering with Boeing on raw materials for the aerospace industry," said Chairman & Managing Director, MIDHANI, Dr Sanjay Kumar Jha. "This sits well with our plans to collaborate with multinational institutions and companies to strengthen our capabilities for producing critically advanced technology products here in India," he added.

A press release from Boeing stated, "Boeing has always supported the development of indigenous aerospace and defence capabilities in India, and has through the years invested in partnerships with the Indian aerospace ecosystem in skilling, research and technology, and manufacturing. Boeing is working closely with its suppliers in India to support supply chain health, identify new ways to drive innovation, and deliver greater value to its customers." II

Naval Group Deepens Partnership with Greek Industry

Contributing to naval and industrial autonomy in Greece as part of the FDI frigates for the Hellenic Navy programme, Naval Group designed a robust Hellenic Industrial Participation plan to develop new capacities in the Hellenic industry, sustaining highly qualified jobs and generating long-term economic spin-offs in Greece.

This commitment goes beyond the frigates programme. Naval Group is committed to building strong and long-term partnerships to support the Hellenic Navy and to contribute in the development of the naval warfare capabilities of the Hellenic Industry.

In this regard, the Group signed seven contracts with several Hellenic industrial partners among which: For the Platform: SALAMIS SHIPYARDS, MEVACO and METKA. For the Combat System: AKMON, MAREL (via THEMYS, Naval Group's original equipment manufacturer), and SIMON TECHNOLOGIES (via THEMYS) Naval Group is particularly proud to announce that significant parts of the FDI, hull blocks, will be produced in Greece by SALAMIS SHIPYARDS.

In addition, Naval Group also signed three framework agreements with

MILTECH, PRISMA and IDE INTRACOM paving the way to future contracts and long-term partnerships.

So far, Naval Group has signed about 20 contracts in total with fifteen Greek companies since the start of the FDI HN program in March 2022.

In addition, all qualified Greek companies will integrate Naval Group's supply chain and have the possibility to participate to other programmes and future international tenders, thus increasing their capabilities as well as their potential economic benefit and visibility on the worldwide naval market.

Enhancing cooperation between French and Hellenic industries Beyond Naval Group, the FDI programme supports the investment in Greece of several French naval companies to develop partnerships with Greek industry, creating added-value and jobs for decades to come. The FDI programme already fostered the rapprochement of the two naval sectors with the GICAN and SEKPY by signing a partnership agreement in February 2020.

As an example, the contracts with MAREL and SIMON TECHNOLOGIES are made via THEMYS, a French subcontractor of Naval Group, which will outsource part of its production in Greece. This shows that the cooperation with the Hellenic industry is not only supported by Naval Group but also by the whole FDI France naval ecosystem.

Furthermore, some of the contracts signed are not only related to the FDI HN programme such as the one with VIKING NORSAFE HELLAS which will produce RHIBs (Rigid-Hulled Inflatable Boats) of the FDI for Hellenic Navy and also for other export programs. This demonstrates Naval Group's trust in its Greek partners which the company considers as long-term partners with whom it is working to build the future of the Hellenic and French naval industries.

In this approach, Naval Group carries out also "On Job Trainings" in favour of Greek companies to enhance their capabilities, in a perspective of long-term cooperation on strategic products that require advanced skills on the state-of-art project. II

RNI No. Deleng/2003/12712